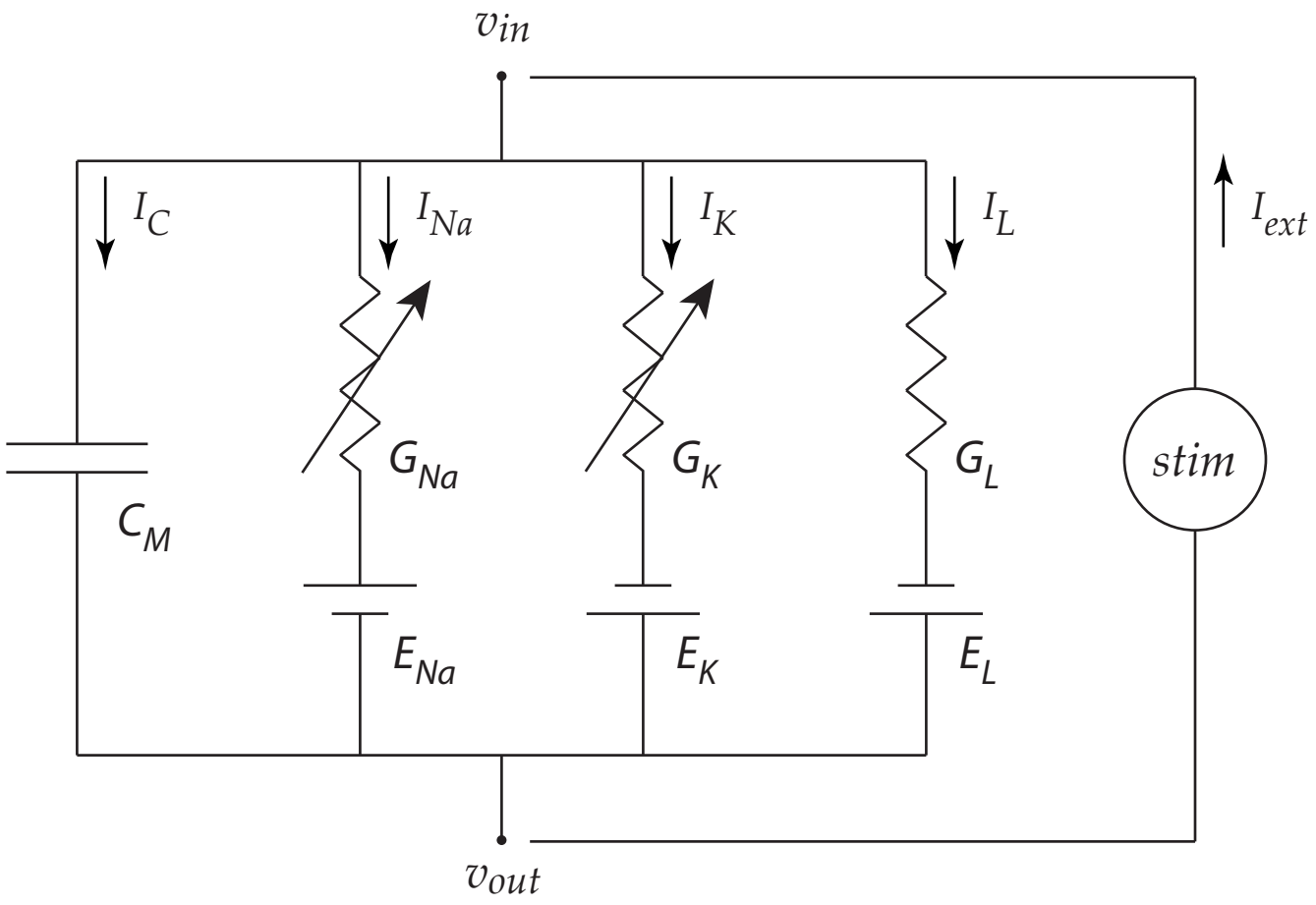
v_{in}
I_C
I_{Na}
I_K
I_L
I_{ext}
G_{Na}
G_K
G_L
stim
C_M
E_{Na}
E_K
E_L
v_{out}

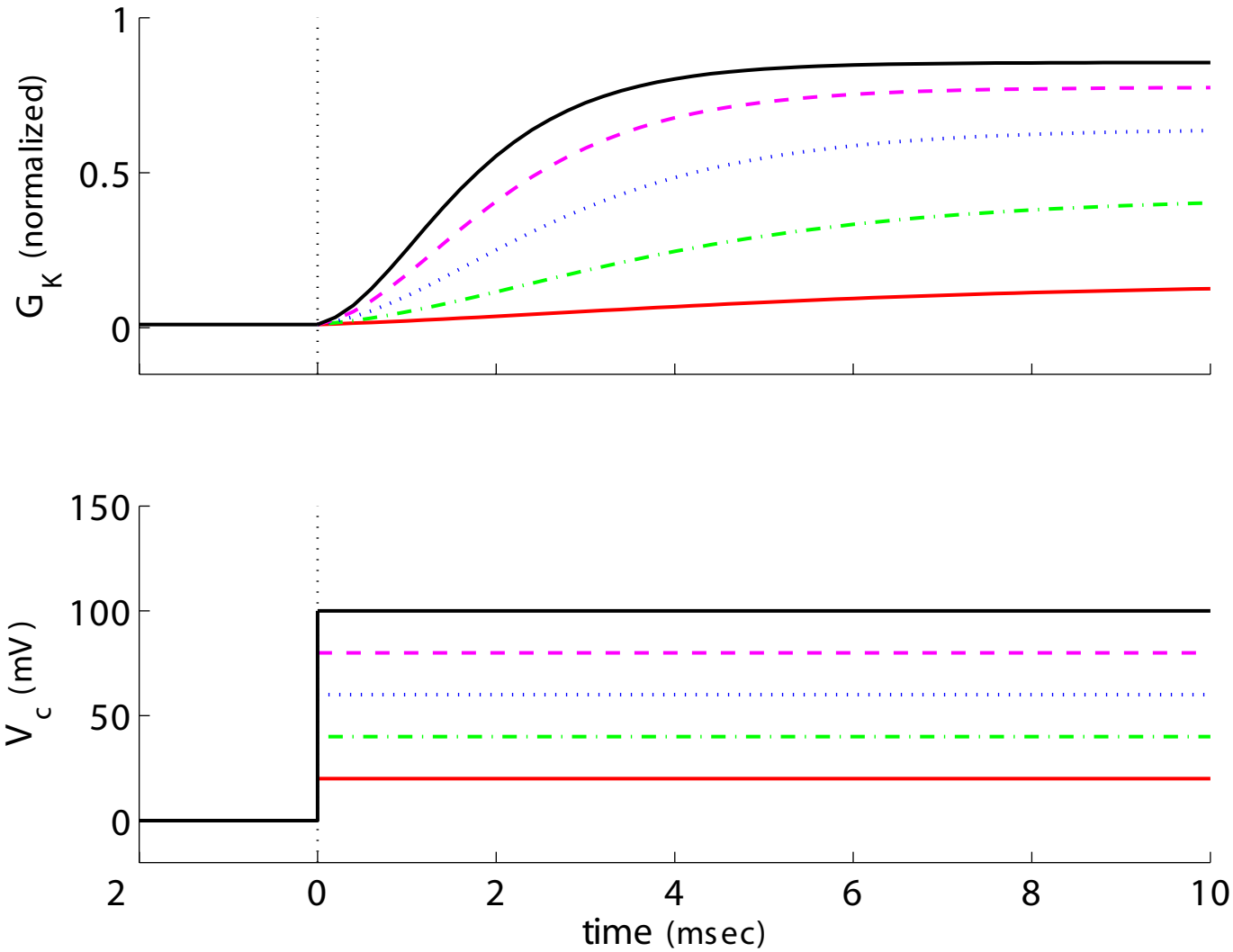
1
0.5
0
G_K (normalized)
150
100
50
0
V_c (mV)
2
0
2
4
6
8
10
time (msec)

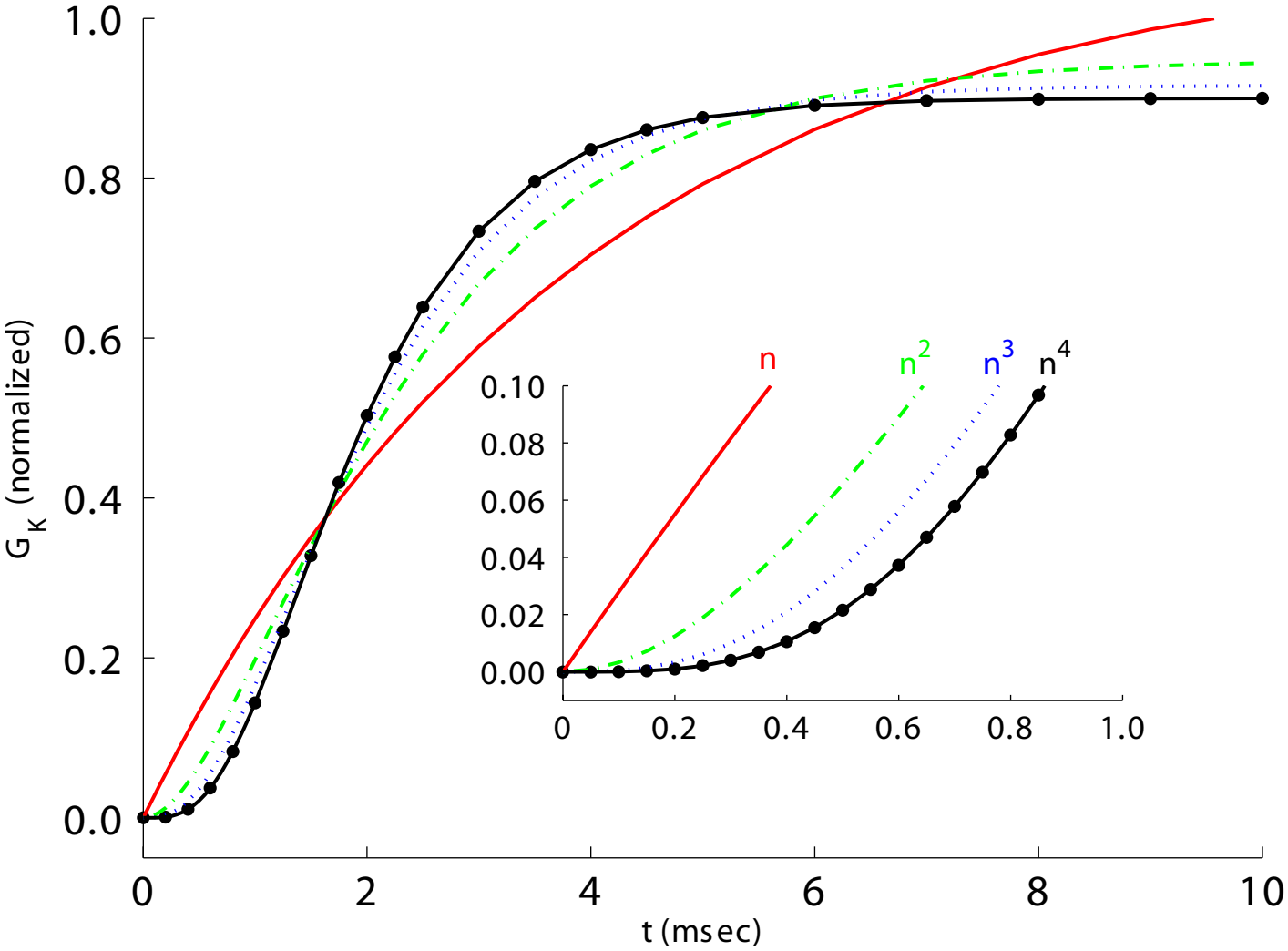
1.0
0.8
0.6
0.4
0.2
0.0
G_K (normalized)
0
2
4
6
8
10
t (msec)
n
n^2
n^3
n^4
0.10
0.08
0.06
0.04
0.02
0.00
0
0.2
0.4
0.6
0.8
1.0

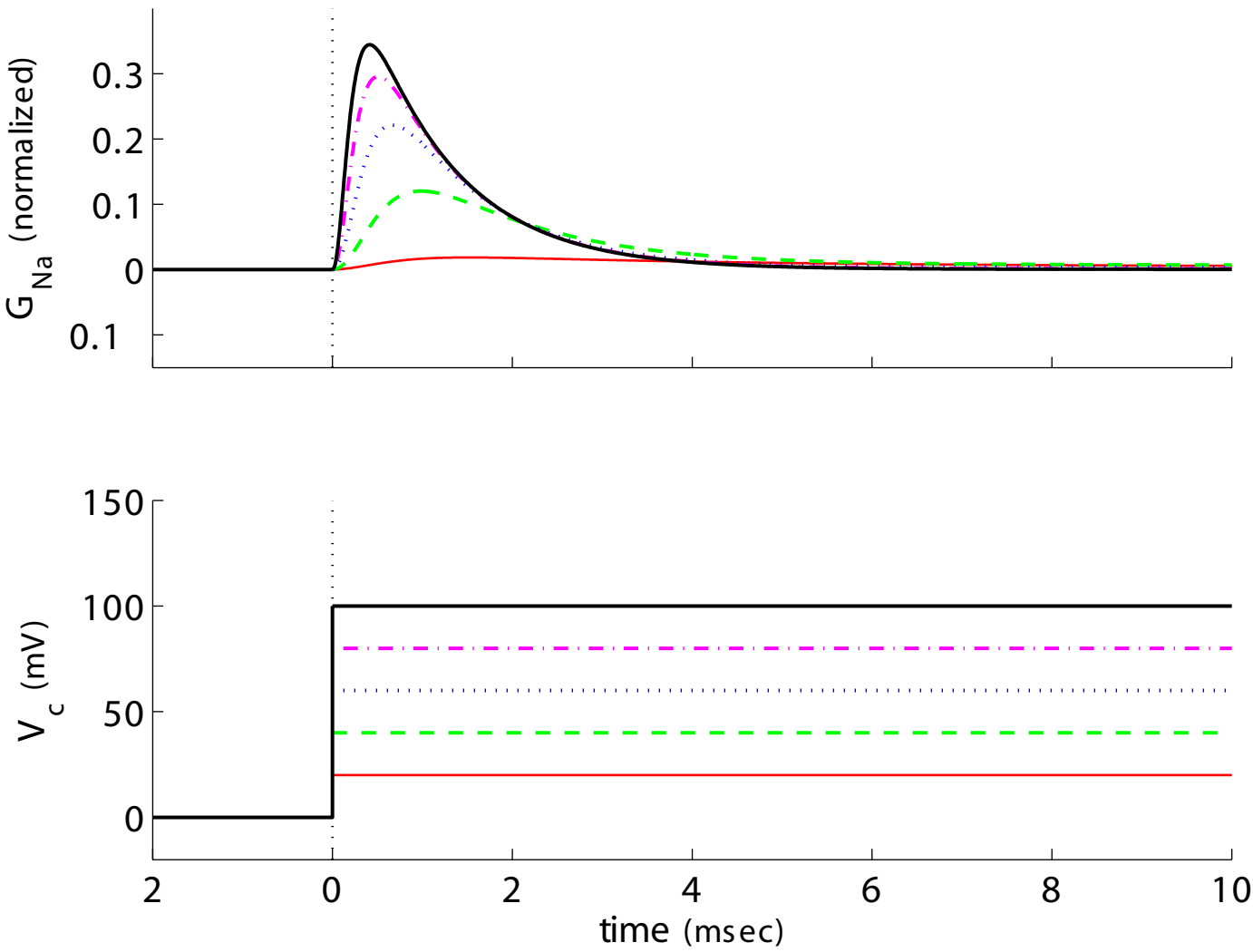
0.3
0.2
0.1
0
0.1
G_Na (normalized)
150
100
50
0
V_c (mV)
2
0
2
4
6
8
10
time (msec)

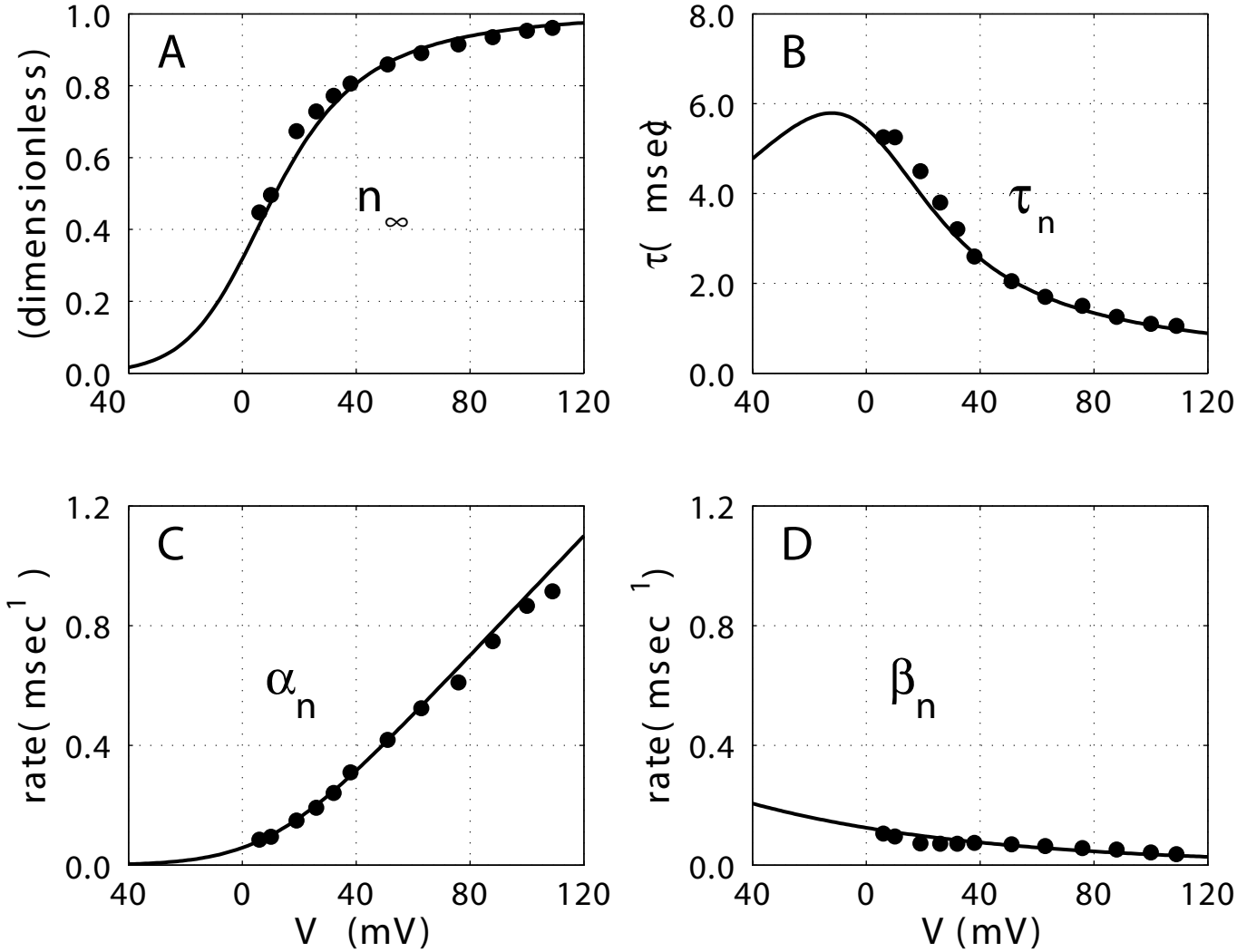
A
n_∞
(dimensionless)
1.0
0.8
0.6
0.4
0.2
0.0
40
0
40
80
120
B
τ_n
τ(msec)
8.0
6.0
4.0
2.0
0.0
C
α_n
rate(msec^{-1})
1.2
0.8
0.4
0.0
V (mV)
D
β_n
rate(msec^{-1})
V (mV)